卷册检索号 SEARCH NO. OF THE VOLUME
MLHVDC-LCS-ECI-DD-CS-0309 30-B003701S-T0309

图纸文件目录（首页）

CATALOG OF DRAWING DOCUMENTS (HEAD PAGE)

拉合尔±660kV换流站 工程 施工图 阶段
±660kV Lahore Converter Station PROJECT Detail Design DESIGN STAGE

结构 专业 第 03 卷 第 09 册
Structure SPECIALITY VOLUME BOOK

卷册名称 直流场避雷线塔基础图(第一次修改)
Volume name layout of foundation for tower of guard cable(first modification)

批 准 APPROVED BY	张[illegible]
审 核 REVIEWED BY	
设计/勘测 DESIGNED BY/ SURVEYED BY	庞金来
图 纸 3 张 DRAWING NOS.	打印件 1 本 PRINTED COPIES NOS.

序号 No.	图 号 DRAWING NO.	文 件 名 称 DOCUMENT TITLE	版本 EDITION	张 NOS.	本 NOS.	备注 REMARKS
1	30-B003701S-T0309-001	直流场避雷线塔基础布置图 layout of foundation for tower of guard cable	B	1		
2	30-B003701S-T0309-002	CT-1承台详图 detail of foundation CT-1	B	1		
3	30-B003701S-T0309-003	CT-2承台详图 detail of foundation CT-2	B	1		

注:

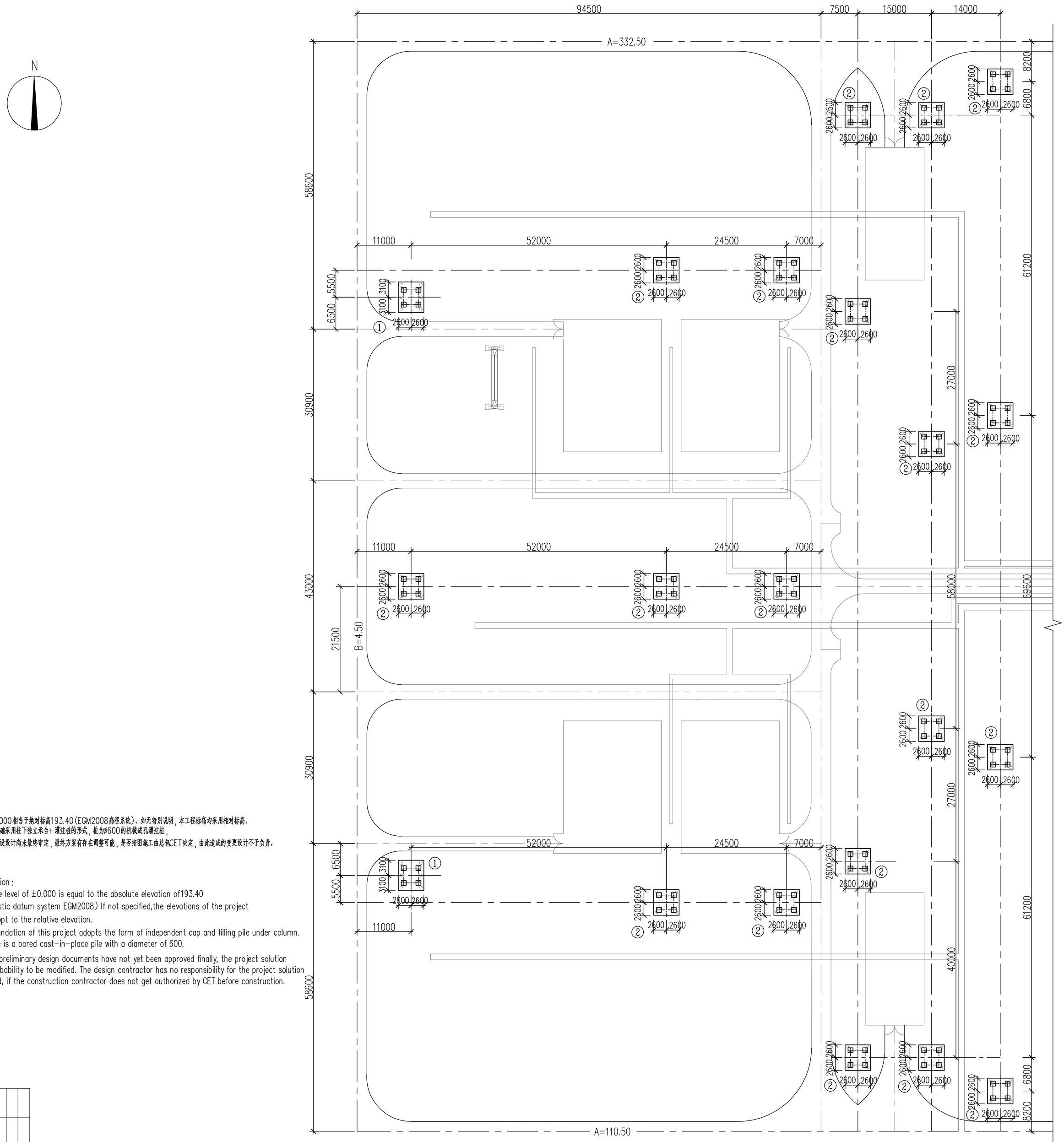

说明：

1、场地±0.000相当于绝对标高193.40(EGM2008高程系统)。如无特别说明，本工程标高均采用相对标高。
2、本工程基础采用柱下独立承台+灌注桩的形式，桩为Ø600的机械成孔灌注桩，
3、本工程初设设计尚未最终审定，最终方案有存在调整可能，是否按图施工由总包CET决定，由此造成的变更设计不予负责。

Specification：

1. The site level of ±0.000 is equal to the absolute elevation of193.40 (geodestic datum system EGM2008) If not specified,the elevations of the project are adopt to the relative elevation.
2. The foundation of this project adopts the form of independent cap and filling pile under column. The pile is a bored cast-in-place pile with a diameter of 600.
3. As the preliminary design documents have not yet been approved finally, the project solution has probability to be modified. The design contractor has no responsibility for the project solution changed, if the construction contractor does not get authorized by CET before construction.

基础平面图 layout of foundation

LISTS OF FOUNDATION基础工程量

NO. 编号	NAME 代号	QTY 数量	DRAWING NO. 施工图号	volume基础工程量(m3) PCS单个	volume基础工程量(m3) SUM总计	remark 备注
①	CT-1	2	30-B003701S-T0309-002	35.0	70.0	基础,foundation
②	CT-2	19	30-B003701S-T0309-003	29.8	566.2	基础,foundation
					636.2m3	

Reference Drawings

Drwg. No.

Title

Revisions

Name	Date	Notes

巴基斯坦默蒂亚里—拉合尔±660kV直流输电工程

±660kV HVDC Project from Matiari to Lahore in Pakistan

CONTRACTOR 国家电网 STATE GRID 中国电力技术装备有限公司 CHINA ELECTRIC EQUIPMENT & TECHNOLOGY CO.,LTD.

SUBCONTRACTOR East China Electric Power Design Institute Co.,Ltd.

NATIONAL TRANSMISSION & DESPATCH COMPANY (NTDC) LIMITED PAKISTAN

拉合尔±660kV换流站

±660kV Lahore Converter Station

M L H V D C - L C S - E C I - D D - C S - 0 3 0 9 - 0 0 1 B

	姓名 Name	日期 Date
设计 Designed	庞金来	18.11.20
校核 Checked	毛春云	18.11.20
审核 Reviewed	张俊清	18.11.20
批准 Approved	张俊清	18.11.20

比例 Scale 1:400

图号 DWG NO. 30-B003701S-T0309-001

设计阶段 PHASE 施工图 Detail Design

版本 REV. B

直流场避雷线塔基础布置图

layout of foundations for tower of guard cable

变电一次 专业 Speciality	郑煜 会签 Sign	18.11.20 日期 Date

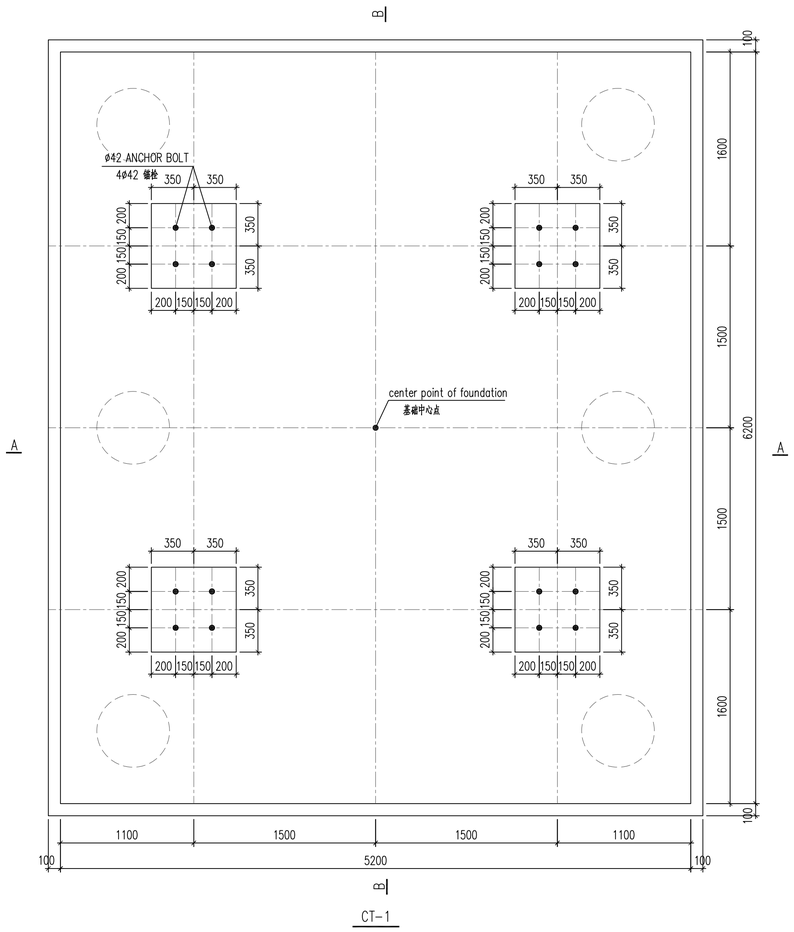

CT-1

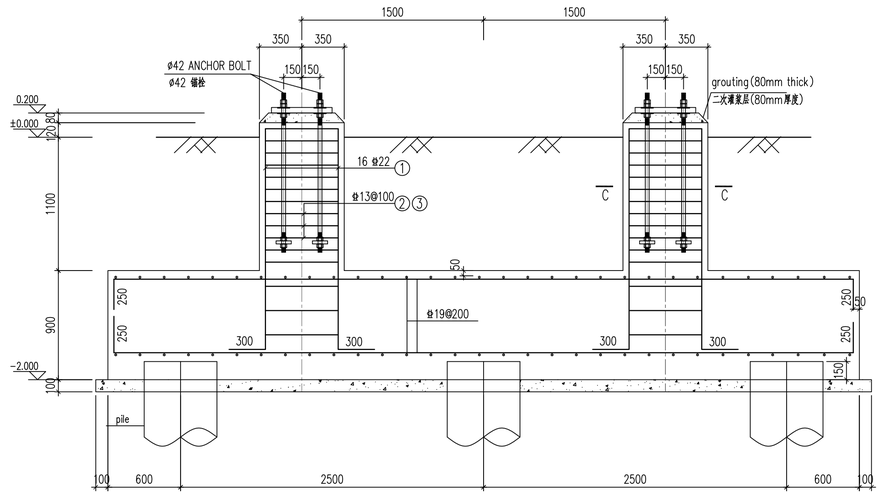

B-B

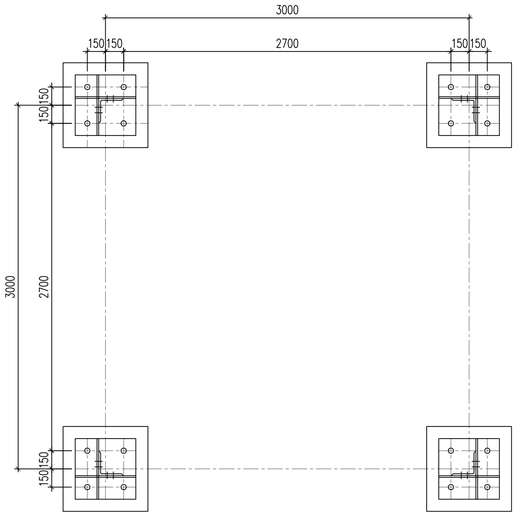

anchor plane
锚栓平面布置图

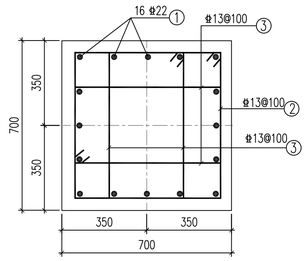

C-C

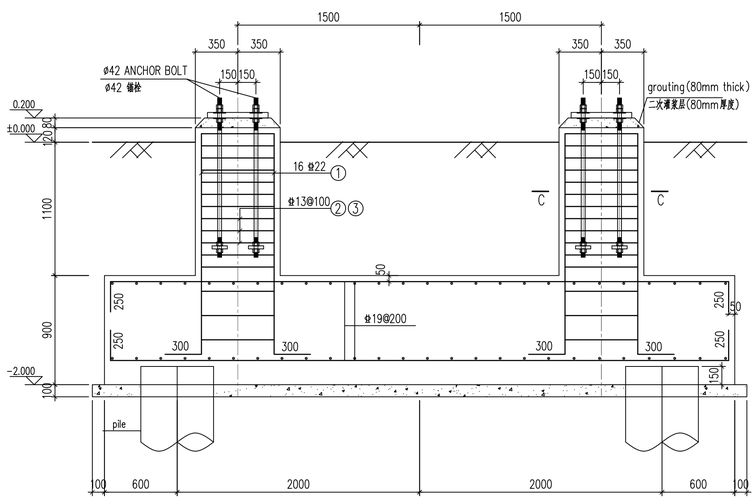

A-A

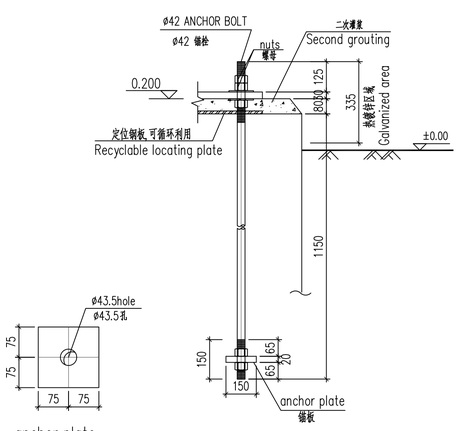

detail for anchor bolt
锚栓详图

anchor plate
锚板

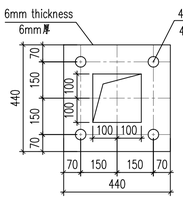

Locating plate
定位钢板

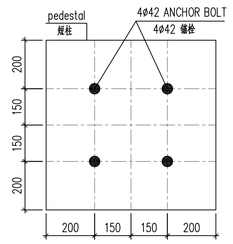

plan of anchor bolt
锚栓平面图

说明:

1、场地±0.000相当于绝对标高193.40(EGM2008高程系统)。
2、本工程基础设计依据《巴基斯坦默蒂亚里±660KV直流输电工程拉合尔±660KV换流站施工图设计阶段 岩土工程勘察报告(详勘)》(B003701S-G01-01)进行。
3.材料
1)混凝土
基础强度等级:fc'=28Mpa
二次灌浆层强度等级:fc'=35Mpa
垫层强度等级:fc'=21Mpa
2)钢筋:ø-ASTM A615 Grade 60,Fu=420Mpa
3)锚栓,螺母,垫片,锚板,定位钢板:Q345B,Fy=345Mpa,Fu=470Mpa
锚栓,螺母,垫片,锚板均需热浸锌防腐。
4. 混凝土要求:
1)水胶比不大于0.50;
2)最大氯离子含量(水泥用量的百分比):0.10;测试方法参《ASTM C 1218M》。
3)水泥型号:采用抗硫酸盐的硅酸盐水泥,水泥型号需满足《ACI 318-14》表19.3.2.1对应于暴露等级S1的水泥种类要求(ASTM C150 或ASTM 595 或ASTM C1157对应的类别);
4)水泥中掺入矿物掺合料(矿物掺合料的掺量、使用方法和耐腐蚀性能按相应产品的使用说明并经验证后确定)。
5. 基础平面图详见30-B003701S-T0309-001
6. 承台底保护层厚度为150mm,其余50mm;柱墩为50mm.
7. 桩与承台的连接构造参见图集(10SG813)34页 桩顶与承台连接构造 桩内主筋伸入承台长度为40d。
8.本工程初设设计尚未最终审定,最终方案有存在调整可能,是否按图施工由总包CET决定,由此造成的变更设计不予负责。

Specification:

1. The site level of ±0.000 is equal to the absolute elevation of193.40.(geodestic datum system EGM2008) If not specified,the elevations of the project are adopt to the relative elevation.
2 .The foundation design of the project proceeds according to《The geotechnical engineering investigation report(Detail survey) of drawing construction design phase of ±660KV converter station in Lahore in Pakistan Matiari ±660KV HVDC project》(B003701S-G01-01).
3.MATERIALS:
1) CONCRETE:
FOR FOUNDATIONS : SPECIFIED COMPRESSIVE CONCRETE STRENGTH f'c=28Mpa
FOR GROUTING: SPECIFIED COMPRESSIVE CONCRETE STRENGTH f'c=35Mpa
FOR concrete cushion: SPECIFIED COMPRESSIVE CONCRETE STRENGTH f'c=21Mpa
2) STEEL REINFORCING:
ø:ASTM A615 GRADE60,MINIMUM YIELD STRENTH Fy=420Mpa
3) ANCHOR BOLTS,NUTS AND WASHERS, anchor plate,Locating plate:
Q345B, MINIMUM YIELD STRENTH Fy=345Mpa.
MINIMUM TENSILE STRENTH Fu=470Mpa.
THE ANCHOR BOLTS, NUTS, WASHERS, anchor plate MUST BE HOT DIP GALVANIZED.
4. Requirements for Concrete:
1) Maximum water-cement ratio is 0.50;
2) Maximum water-soluble chloride ion content is 0.1;Test method refers to "ASTM C 1218M".
3) Type of Concrete: Concrete should be made of sulfate-resistance silica cement. Cement type should fulfill the requirements for concrete used in exposure grade S1, according to《ACI 318-14》table 19.3.2.1.(ASTM C150,ASTM 595 or ASTM C1157 corresponding cement type).
4) Add mineral admixtures (the dosage, using method and anti-corrosion ability should be tested according to the product manual)
5. See Plan for location of Foundations 30-B003701S-T0309-001
6. The concrete cover of bottom of pile cap is 150mm and the rest is 50mm;50mm for pedestal.
7. The connection structure between the pile and the cap refers to the 34 page of atlas (10SG813).The main reinforcement extends into the pile cap with a length of 40d.
8. As the preliminary design documents have not yet been approved finally, the project solution has probability to be modified. The design contractor has no responsibility for the project solution changed, if the construction contractor does not get authorized by CET before construction.

Reference Drawings

Drwg. No.	Title

Revisions

Name	Date	Notes

巴基斯坦默蒂亚里—拉合尔±660kV直流输电工程
±660kV HVDC Project from Matiari to Lahore in Pakistan

NATIONAL TRANSMISSION & DESPATCH COMPANY (NTDC) LIMITED PAKISTAN

CONTRACTOR 国家电网 STATE GRID 中国电力技术装备有限公司 CHINA ELECTRIC POWER EQUIPMENT AND TECHNOLOGY CO.,LTD.

SUBCONTRACTOR East China Electric Power Design Institute Co.,Ltd.

拉合尔±660kV换流站
±660kV Lahore Converter Station

设计阶段 PHASE: 施工图 Detail Design

M L H V D C - L C S - E C I - D D - C S - 0 3 0 9 - 0 0 2 B

	姓名 Name	日期 Date
设计 Designed	庞金来	18.11.20
校核 Checked	毛海平	18.11.20
审核 Reviewed	邹清晖	18.11.20
批准 Approved	杨浮	18.11.20

CT-1承台详图
detail of foundation CT-1

比例 Scale: 1:25
图号 DWG NO.: 30-B003701S-T0309-002
版本 REV.: B

594X841

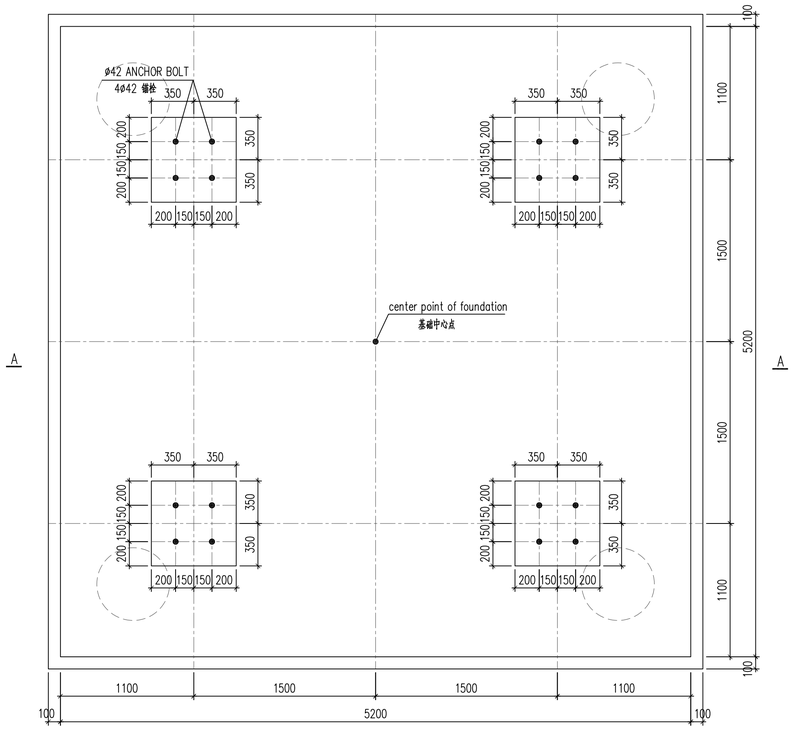

CT-2

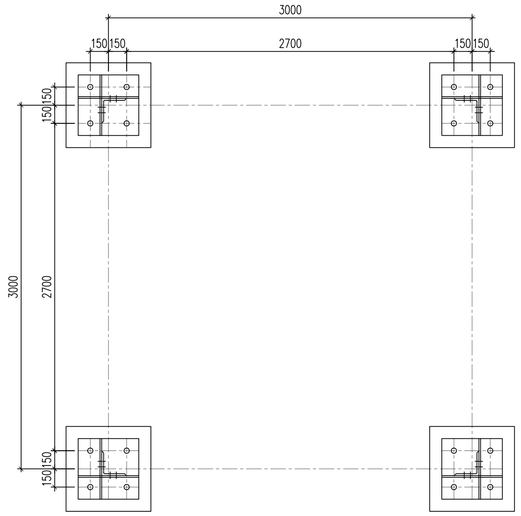

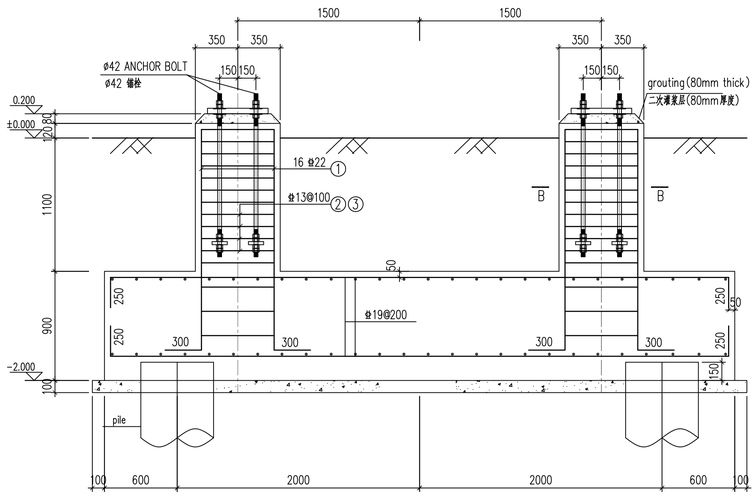

A–A

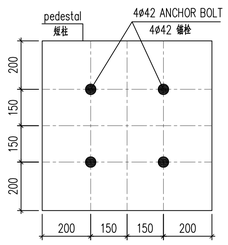

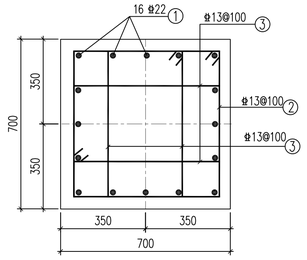

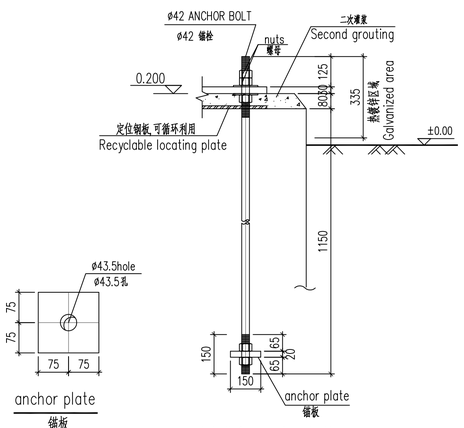

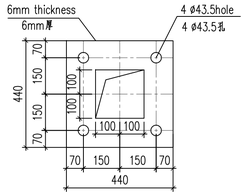

说明:

1、场地±0.000相当于绝对标高193.40(EGM2008高程系统)。
2、本工程基础设计依据《巴基斯坦默蒂亚里±660KV直流输电工程拉合尔±660KV换流站施工图设计阶段 岩土工程勘察报告(详勘)》(B003701S-G01-01)进行。
3.材料
 1)混凝土
 基础强度等级:fc'=28Mpa
 二次灌浆层强度等级:fc'=35Mpa
 垫层强度等级:fc'=21Mpa
 2)钢筋:ø-ASTM A615 Grade 60,Fu=420Mpa
 3)锚栓,螺母,垫片,锚板,定位钢板:Q345B,Fy=345Mpa,Fu=470Mpa
 锚栓,螺母,垫片,锚板均需热浸锌防腐。
4. 混凝土要求:
 1)水胶比不大于0.50;
 2)最大氯离子含量(水泥用量的百分比):0.10;测试方法参《ASTM C 1218M》。
 3)水泥型号:采用抗硫酸盐的硅酸盐水泥,水泥型号需满足《ACI 318-14》表19.3.2.1对应于暴露等级S1的水泥种类要求(ASTM C150 或ASTM 595 或ASTM C1157对应的类别);
 4)水泥中掺入矿物掺合料(矿物掺合料的掺量、使用方法和耐腐蚀性能按相应产品的使用说明并经验证后确定)。
5. 基础平面图详见 30-B003701S-T0309-001
6. 承台底保护层厚度为150mm,其余50mm;柱墩为50mm.
7. 桩与承台的连接构造参见图集(10SG813)34页 桩顶与承台连接构造,桩向主筋伸入承台长度为40d。
8.本工程初设设计尚未最终审定,最终方案有存在调整可能,是否按图施工由总包CET决定,由此造成的变更设计不予负责。

Specification:

1. The site level of ±0,000 is equal to the absolute elevation of193.40.(geodestic datum system EGM2008) If not specified,the elevations of the project are adopt to the relative elevation.
2 .The foundation design of the project proceeds according to《The geotechnical engineering investigation report(Detail survey) of drawing construction design phase of ±660KV converter station in Lahore in Pakistan Matiari ±660KV HVDC project》(B003701S-G01-01).
3.MATERIALS:
 1) CONCRETE:
 FOR FOUNDATIONS : SPECIFIED COMPRESSIVE CONCRETE STRENGTH f'c=28Mpa
 FOR GROUTING: SPECIFIED COMPRESSIVE CONCRETE STRENGTH f'c=35Mpa
 FOR concrete cushion: SPECIFIED COMPRESSIVE CONCRETE STRENGTH f'c=21Mpa
 2) STEEL REINFORCING:
 ø: ASTM A615 GRADE60,MINIMUM YIELD STRENTH Fy=420Mpa
 3) ANCHOR BOLTS,NUTS AND WASHERS, anchor plate,Locating plate:
 Q345B, MINIMUM YIELD STRENTH Fy=345Mpa.
 MINIMUM TENSILE STRENTH Fu=470Mpa.
 THE ANCHOR BOLTS, NUTS, WASHERS, anchor plate MUST BE HOT DIP GALVANIZED.
4. Requirements for Concrete:
 1) Maximum water-cement ratio is 0.50;
 2) Maximum water-soluble chloride ion content is 0.1;Test method refers to "ASTM C 1218M".
 3) Type of Concrete: Concrete should be made of sulfate-resistance silica cement. Cement type should fulfill the requirements for concrete used in exposure grade S1, according to《ACI 318-14》table 19.3.2.1.(ASTM C150,ASTM 595 or ASTM C1157 corresponding cement type).
 4) Add mineral admixtures (the dosage, using method and anti-corrosion ability should be tested according to the product manual)
5. See Plan for location of Foundations 30-B003701S-T0309-001
6. The concrete cover of bottom of pile cap is 150mm and the rest is 50mm;50mm for pedestal.
7. The connection structure between the pile and the cap refers to the 34 page of atlas (10SG813).The main reinforcement extends into the pile cap with a length of 40d.
8. As the preliminary design documents have not yet been approved finally, the project solution has probability to be modified. The design contractor has no responsibility for the project solution changed, if the construction contractor does not get authorized by CET before construction.

Reference Drawings

Drwg. No.	Title

Revisions

Name	Date	Notes

巴基斯坦默蒂亚里-拉合尔±660kV直流输电工程
±660kV HVDC Project from Matiari to Lahore in Pakistan

NATIONAL TRANSMISSION & DESPATCH COMPANY (NTDC) LIMITED PAKISTAN

CONTRACTOR 国家电网 STATE GRID 中国电力技术装备有限公司 CHINA ELECTRIC POWER EQUIPMENT AND ENGINEERING CO.,LTD.

SUBCONTRACTOR East China Electric Power Design Institute Co.,Ltd.

拉合尔±660kV换流站
±660kV Lahore Converter Station

设计阶段 PHASE: 施工图 Detail Design

MLHVDC-LCS-ECI-DD-CS-0309-003B

	姓名 Name	日期 Date
设计 Designed	庞金来	18.11.20
校核 Checked	毛海平	18.11.20
审核 Reviewed	邹儒清	18.11.20
批准 Approved	韩柏平	18.11.20

CT-2承台详图
detail of foundation CT-2

比例 Scale: 1:25
图号 DWG NO.: 30-B003701S-T0309-003
版本 REV.: B

594X841